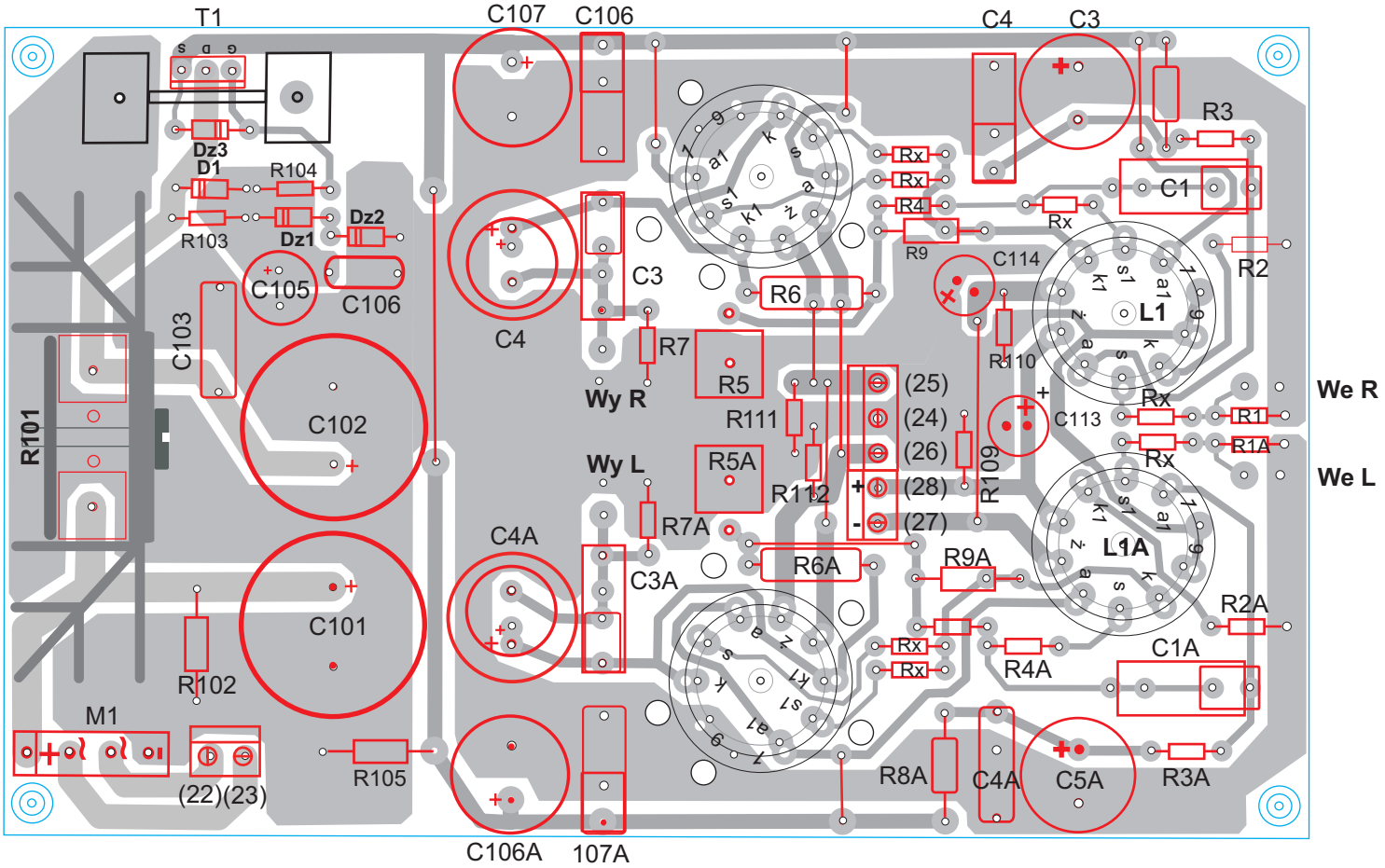
T1
C107
C106
C4
C3
R3
C1
R2
Dz3
D1
R104
R103
Dz1
Dz2
C105
C106
C103
R101
C102
C101
R102
M1
(22)(23)
R105
C4
C3
R7
Wy R
R5
R6
R111
R5A
Wy L
R112
R7A
C4A
C3A
R6A
R8A
C4A
C5A
R3A
C106A
107A
Rx
R4
R9
C114
R110
R109
(25)
(24)
(26)
(28)
(27)
C113
L1
L1A
R1
R1A
We R
We L
R9A
R2A
R4A
C1A

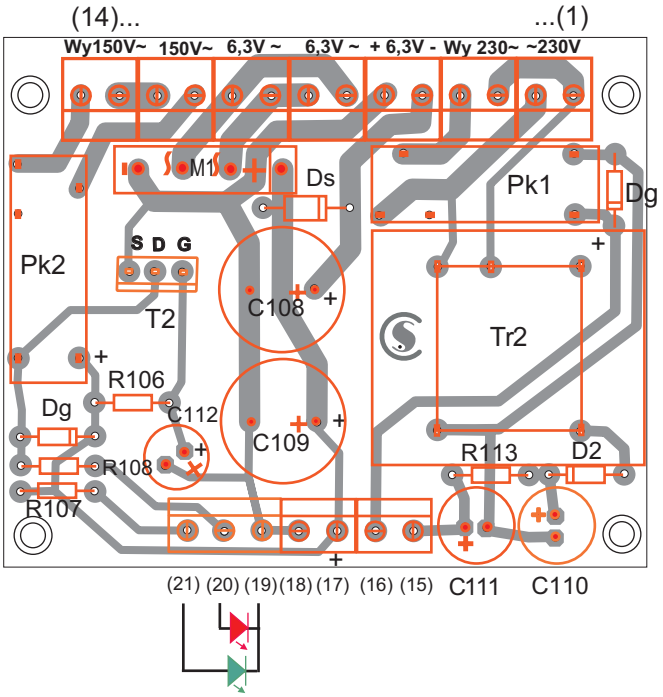
(14)...
...(1)
Wy150V~
150V~
6,3V ~
6,3V ~
+ 6,3V -
Wy 230~
~230V
M1
Ds
Pk1
Dg
Pk2
S D G
T2
C108
Tr2
R106
Dg
C112
C109
R108
R107
R113
D2
(21) (20) (19)(18) (17) (16) (15)
C111
C110